BOB Bobolowski GmbH

HTBL-S

The new AC synchronous servo motor

From us you get the space, that
Your designer is searching for!

High torque combined with

- Compact design
- Little rotor inertia
- High efficiency
- Excellent cost-effectiveness

Robert-Bosch-Str. 3
D-79585 Steinen
Germany
Tel. : +49 (0)7627 - 923 76 - 0
Fax : +49 (0)7627 - 923 76 - 20
info@bobolowski.com
www.bobolowski.com

Our compact motors make it possible

HTBL-S series

AC synchronous servo motors
with 10-pole 3-phase windings
protction class IP54
with resolver
minimal length
numerous other options
in order key code

Maximum permitted motor terminal voltage $U_{max\ eff}$ 500 V (≙ $U_{IC\ max\ DC}$ = 700V)

	Torque			Speed		Mass	Length	Flange			Height	Shaft	
	M_c (Nm)	M_s (Nm)	M_{MAX} (Nm)	n_{MAX} (1/min)	J (kgcm²)	m (kg)	L (mm)	F (mm)	Ø Z (mm)	P.C.D. B (mm)	H (mm)	Ø W (mm)	WE (mm)
HTBL-S 055/017-3stw-1-1111-S	0,31	0,26	1,1	8000	0,067	0,9	80,5	57	40	63	107	9	25
HTBL-S 055/035-3stw-1-1111-S	0,54	0,45	2,5	8000	0,128	1,2	98,5						
HTBL-S 055/070-3stw-1-1111-S	0,93	0,77	6,0	8000	0,247	1,7	133,5						
HTBL-S 055/105-3stw-1-1111-S	1,30	1,10	9,5	8000	0,367	2,2	168,5						
HTBL-S 070/017-3stw-1-1111-S	0,7	0,6	2,7	6000	0,24	1,4	89,5	70	60	75	119	14	30
HTBL-S 070/035-3stw-1-1111-S	1,3	1,1	6,1	6000	0,42	1,9	107,5						
HTBL-S 070/070-3stw-1-1111-S	2,2	1,8	12,0	6000	0,79	2,7	142,5						
HTBL-S 070/105-3stw-1-1111-S	2,5	2,1	21,0	6000	1,17	3,6	177,5						
HTBL-S 093/017-3stw-1-1111-S	1,4	1,2	4,4	4000	0,66	2,4	84	93	80	100	143	19	40
HTBL-S 093/035-3stw-1-1111-S	2,8	2,3	10,5	4000	1,17	3,1	102						
HTBL-S 093/070-3stw-1-1111-S	4,7	3,9	22,5	4000	2,24	4,8	137						
HTBL-S 093/105-3stw-1-1111-S	6,5	5,4	33,6	4000	3,32	6,2	172						
HTBL-S 093/140-3stw-1-1111-S	7,6	6,3	52,0	4000	4,40	7,9	207						
HTBL-S 138/035-3stw-1-1111-S	8,2	6,8	22,0	3000	6,44	8,5	118,5	138	130	165	213	32	58
HTBL-S 138/070-3stw-1-1111-S	14,6	12,1	42,0	3000	11,52	12,1	153,5						
HTBL-S 138/105-3stw-1-1111-S	20,4	17,0	62,0	3000	16,61	15,8	188,5						
HTBL-S 138/140-3stw-1-1111-S	24,5	20,3	90,0	3000	21,69	19,1	223,5						

M_c : Continuous torque (@ 5 rpm ; Cu: 145°C)
M_s : Stall torque (< 5 rpm ; Cu: 145°C)
M_{MAX} : Maximum torque

J : Rotor inertia

Special models on request

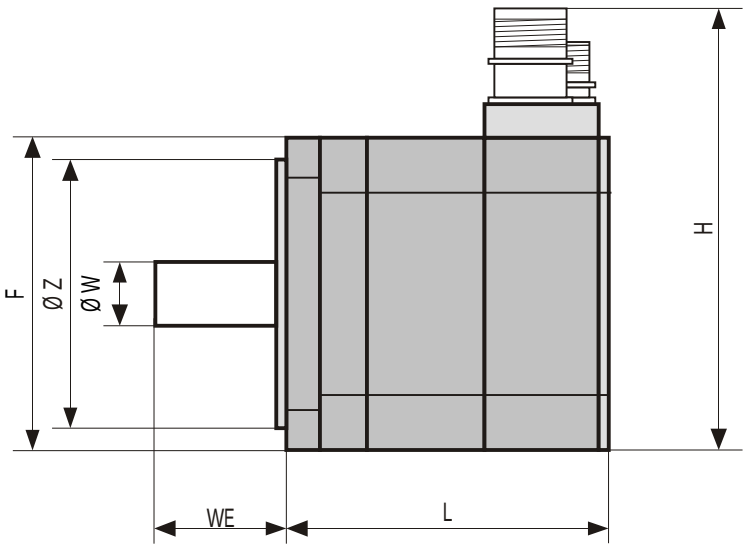

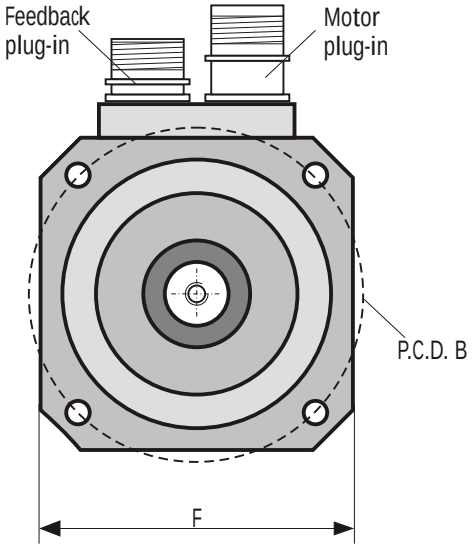

For our wide range of linear and servo motors please ask for additional, detailed information
All products are "Made in Germany"

© BOB Bobolowski GmbH 2011